A review of MPPT techniques for wind energy systems : Offshore Challenges and Solutions

1st Sohayla EL OUARDI
LISA laboratory
Sidi Mohamed Ben Abdelah University
Fez, Morocco
souhayla.elouardi@usmba.ac.ma

2nd Mourad YESSF
LIMAS Laboratory
Sidi Mohamed Ben Abdelah University
Fez, Morocco
mourad.yessef@usmba.ac.ma

3rd Yassine CHAIBI
LISA laboratory
Sidi Mohamed Ben Abdelah University
Fez, Morocco
chaibi.yassine@usmba.ac.ma

4th Zakaria CHALH
LISA laboratory
Sidi Mohamed Ben Abdelah University
Fez, Morocco
zakaria.chalh@usmba.ac.ma

***Abstract*— This paper presents a comparative review of four main algorithms used for Maximum Power Point Tracking (MPPT) in wind energy conversion systems namely Perturb and Observe (P&O), Tip Speed Ratio (TSR), Fuzzy Logic (FLC) and Artificial Neural Networks (ANN). These techniques were compared in terms of efficiency, simplicity, adaptability and cost. Each method has its advantages and its limitations, based on wind variations. And a particular attention is given to the offshore wind systems, where the conditions are more challenging because of the structure movements, the strong wind and the maintenance difficulties. The research shows that these environments require more intelligent and more adaptive control solutions, and it concludes that the hybrid approaches that combine conventional and intelligent methods may offer better performance in the offshore environments.**

Keywords*— *Wind Energy Conversion system, DFIG, MPPT, P&O, TSR, ANN, FLC.

I. Introduction

The rising demand for electricity, driven by technological progress and by population growth, has made the search for sustainable energy solutions more urgent than ever. Fossil fuels, once the dominant source of power, are now facing challenges such as depletion, rising costs, and environmental damage. As a result, renewable energy has become a very crucial alternative, with wind energy standing out for its stability, its efficiency, and its low environ-mental impact. With the global push toward cleaner energy, wind power is playing a very important role in reducing dependence on conventional resources and on supporting a more sustainable future[1]. Wind Energy Conversion Systems (WECS) are a crucial part of the renewable resource by converting wind power into electricity. However, their efficiency depends on the ability to capture the maximum possible power available in varying wind conditions. Wind turbines operate within a specific range of wind speeds and ensure optimal energy capture while preventing mechanical failures[2]. At low wind speed, the turbine remains inactive, while in moderate wind speeds, it rotates and produces energy efficiently, and when the wind speed exceeds safety limits, it limits power production or regulates it to protect the system's equipment. In order to optimize energy capture and improve overall performance, Maximum Power Point Tracking (MPPT) algorithms are used [3], [4]. To achieve this objective, several MPPT techniques have been proposed, each of these techniques presenting advantages suitable for environmental conditions and system characteristics [5]. Traditional methods, such as Perturb and Observe (P&O) and Tip Speed Ratio (TSR), are widely used because of their simplicity of implementation. However, more advanced methods such as Fuzzy Logic Control (FLC) and Artificial Neural Networks (ANN), which promise better adaptability and improved tracking performance in dynamic environmental conditions, are becoming increasingly attractive [6], [7], [8]. The choice of an appropriate MPPT approach is essential to optimize the efficiency of the wind system, hence the importance of developing intelligent control strategies adapted to specific conditions [9]. A comparative study of the different approaches identify their strengths and weaknesses, as well as improvement prospects likely to increase the robustness of systems and their energy efficiency [10]. This review aims to analyze and compare MPPT methods based on P&O, TSR, FLC, and ANN.

The structure of this article is as follows: The second section presents in detail the MPPT control techniques. The third section discusses the results of the comparison and finally, the conclusion summarizes the main results and proposes future research directions in this field.

II. System overview

The system is based on two power converters: the grid-side converter (GSC) and the rotor-side converter (RSC) to provide a constant power supply to the grid. The RSC performs a crucial role in the controlling of both the active and the reactive power by the adjustment of some parameters, and this helps to keep the system in a stable state[11]. and in this system, a doubly-fed induction generator (DFIG) is connected to the grid by a two-way converter, which enables the power to be exchanged between the rotor and the grid. The global performance of the system is not only dependent on the features of the DFIG, but it also depends on the efficiency of the control of the converters, and with the correct control algorithms the energy production can be maximised, the stability of the system can be assured, and also the transmission of the energy to the grid made more efficient.[12].

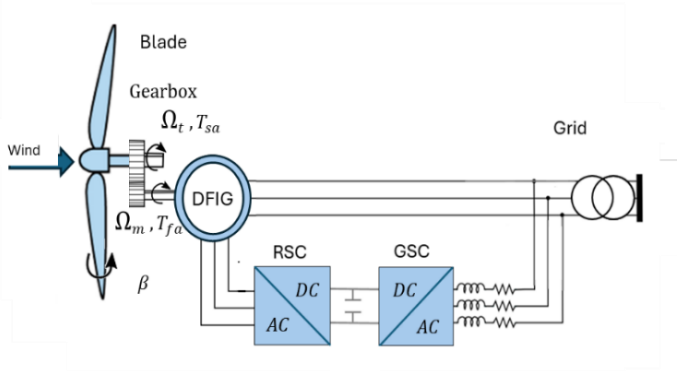

Fig 1. Wind Power System with DFIG

979-8-3315-3352-6/25/$31.00 ©2025 IEEE

The power coefficient is calculated using the following relation [13]:

$$C_p(\lambda,\beta) = 0.5176\left(\frac{116}{\lambda_i} - 0.4\beta - 5\right)e^{-\frac{21}{\lambda_i}} + 0.0068\lambda \quad (1)$$

With:

$$\lambda_i = \left(\frac{1}{\lambda + 0.08\beta} - \frac{0.035}{\beta^3 + 1}\right)^{-1} \quad (2)$$

The aerodynamic torque, is given by [12]:

$$T_{sa} = \frac{1}{2\Omega_t} C_p(\lambda,\beta)\rho S v^3 \quad (3)$$

The gearbox is represented by two fundamental equations[12]:

$$\Omega_m = G\Omega_t \quad (4)$$

$$T_{sa} = GT_{fa} \quad (5)$$

Ω_t : Rotational speed of the turbine shaft

Ω_m : the speed required by the generator

The total inertia J is the sum of the generator's inertia J_g and the turbine's inertia J_t referred to the generator[12]:

$$J = \frac{J_t}{G^2} + J_g \quad (6)$$

J_t: turbine's inertia

J_g : DFIG's inertia

The following dynamic equation represents the influence of the electromagnetic torque T_{em} on the angular speed Ω_m, which is the sum of the electromagnetic torque T_{em}, the viscous friction torque $f\Omega_m$, and the torque transmitted by the low-speed shaft T_{fa} [12]:

$$J\frac{d\Omega_m}{dt} = T_{mec} = T_{fa} - T_{em} - f\Omega_m \quad (7)$$

III. MPPT TECHNIQUES FOR WECS

A. Tip Speed Ratio (TSR) control

The Tip Speed Ratio (TSR) control method is widely used to maximize energy extraction from Wind Energy Conversion Systems (WECS) by maintaining an optimal ratio between rotor speed and wind speed[14] [3]. To work effectively this method requires an accurate estimation of both wind speed and generator rotational speed to dynamically adjust the rotor speed and to ensure operation at the Maximum Power Point Tracking [8], And to obtain these data there are two main approaches : using mechanical sensors, such as anemometers, or estimating wind speed numerically. because it reduces installation costs and it improves stability, this approach is preferred. It works by comparing the target rotor speed with the actual rotor speed then it sends the difference between the two to a controller that adjusts the speed of the generator [4], [7]. To maximize the energy produced this method keeps the TSR at its optimal value even if the wind speed changes [15]. But still a big problem in this method is that measuring the wind speed in real time accurately is difficult so it makes some errors and this affects the performance of tracking the maximum power point [9]. To solve this problem, advanced methods such as Kalman filters and intelligent algorithms are used, also filtering and smoothing devices are used to avoid sudden changes in torque. This can helps to reduce dynamic loads and to extend the life of mechanical parts [9]. As shown in Fig 2, the TSR control system includes these improvements to ensure effective regulation of the generator and to capture as much energy as possible under different wind speeds [4], [8].

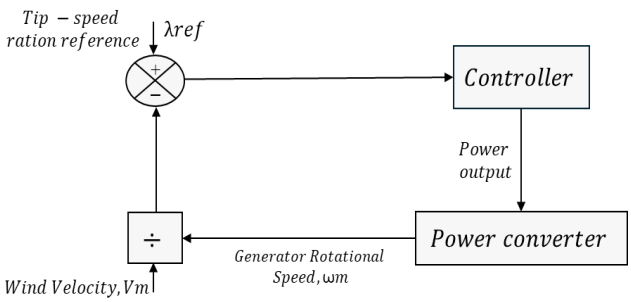

Fig 2. The block diagram of the tip speed ratio control

B. Perturbation and observation (P&O) control

Maximum power point (MPPT) tracking in wind energy conversion systems (WECS) is based on different techniques, among which the Perturb and Observe (P&O) algorithm is one of the most widely used due to its simplicity and its low cost of implementation [16] [17]. This algorithm is also known as Hill Climbing Search (HCS) is based on a mathematical optimization method thatidentifies the maximum power point (MPP) byperturbation of a control parameter, such as DC bus voltage, rotor speed, or converterthe duty cycle, and observing the effect of this disturbance on the generator output power [5]. The conventional approach consists of successively adjusting one of these parameters until reaching a state where the slope of the power curve becomes zero, which indicates the achievement of the MPP. In its traditional method P&O does not require mechanical sensors or prior knowledge of wind turbine parameters, which is a major advantage in terms of simplicity and of stability [3], [4]. Its operating principle is based on the analysis of the effect of each disturbance: if an increase in rotor speed or DC bus voltage leads to an increase in the power extracted, the next disturbance continues in the same direction. Conversely if the power decreases, the direction of the disturbance is reversed [2]. Fig. 3 illustrates the functional diagram of this algorithm, while Fig. 4 represents its operating principle [3]. However, one of the main challenges of P&O is the choice of the size of the disturbance step. Too large a pitch accelerates the response of the system but generates oscillations around the MPP, reducing overall efficiency. Conversely, a pitch that is too small improves the accuracy of the tracking but increases the time to convergence, making the method ineffective in the presence of rapid wind variations [3], [4], [7]. In addition, under fluctuating and varying wind speed conditions the algorithm can confuse natural variations in power with those caused by its own disturbances, which leade to an incorrect estimation of the direction of the next disturbance and consequently, a loss of MPP tracking [4]. Fig. 5 illustrates this problem of tracking the MPP under variable wind conditions [3]. To overcome these limitations, several

improvements to the technique P&O have been proposed such as including the adoption of variable step size strategies, where the size of the disturbance is dynamically adjusted as a function of the distance from the MPP, and when the operating point is far from the MPP a larger step is used to accelerate convergence, while a smaller step is applied as one approaches the MPP to reduce oscillations and improve system stability [4]. Other variants exploit mechanical power monitoring or duty cycle adjustment to enhance tracking robustness, particularly in compensating for the inertia effects of large and medium-sized turbines [4], [7].

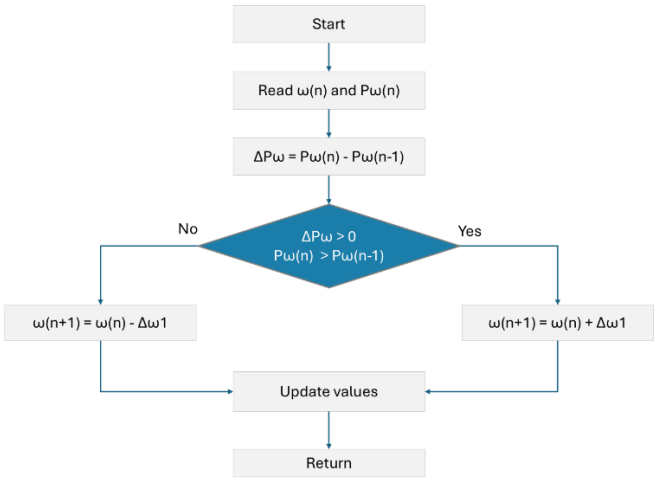

Fig 3. Flowchart of P&O algorithm.

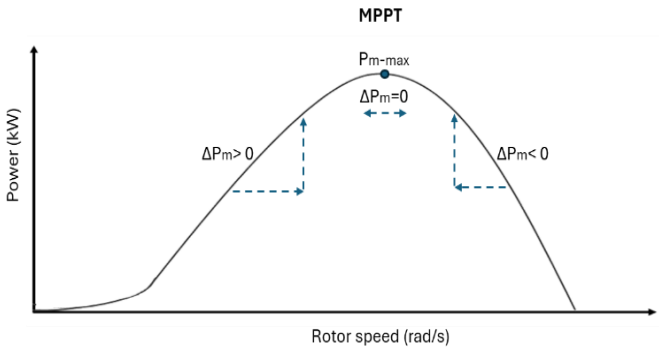

Fig 4.Concept of working of P&O MPPT algorithm.

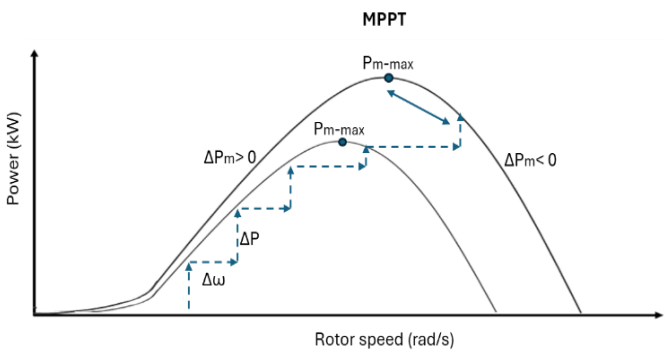

Fig 5. Problem of tracking MPP under varying speeds of the wind.

C. *Fuzzy Logic Control (FLC)*

The Maximum Power Point Tracking (MPPT) algorithm based on the Fuzzy Logic Control (FLC) is frequently used for wind energy optimization because of its ability to adapt to dynamic weather changes without requiring to complex mathematical modeling of the wind system [3]. This approach updates parameters of the controller continuously, it works based on the wind fluctuations to ensure an accurate tracking of the optimal rotor speed to maximize the aerodynamic efficiency of the wind turbine [18]. This method fuzzy Logic Control relies on a set of predefined rules and of a membership functions, allowing for quick decision-making in response to changes in power and in speed [8]. The main strength of this method lies in its robustness in the face of uncertainties and system nonlinearities. However its performance depends largely on the initial design of control rules and on the membership functions, which requires expert knowledge for optimal tuning [19]. The structure of the FLC follows three main steps that are : fuzzification, which converts digital inputs (such as power and speed variations) into linguistic values; fuzzy inference, which applies an "IF-THEN" set of rules to determine the appropriate controller response; and defuzzification, which translates the linguistic output into a numerical value that can be used by the system [20], [21]. Among the commonly used approaches, the Mamdani model is often preferred due to its simplicity and its ease of interpretation, while the center of gravity method is usually preferred for defuzzification to ensure accurate controller responses [21]. In MPPT applications the P&O algorithm is combined with fuzzy logic to adjust dynamically the rotor speed based on the changes in the power and in the speed. If an increase in speed leads to an increase in power the speed continues to increase; and if a higher speed reduces the power, it is adjusted accordingly [10]. This hybrid approach takes advantage of the advantages of both methods that are the rapid convergence of the P&O and the robustness of the FLC in the face of random wind variations [22]. In addition, incorporating scaling factors for the input and output signals helps the controller to adjust its sensitivity to disturbances without changing its overall structure by improving the stability of the wind system even under turbulent conditions [19]. Thus, fuzzy logic-based MPPT can offer an efficient solution to optimize the wind power generation, this by providing adaptive monitoring of the maximum power point with a fast dynamic response and a high tolerance to system uncertainties [23], Fig. 6 shows the FLC diagram for WECS.

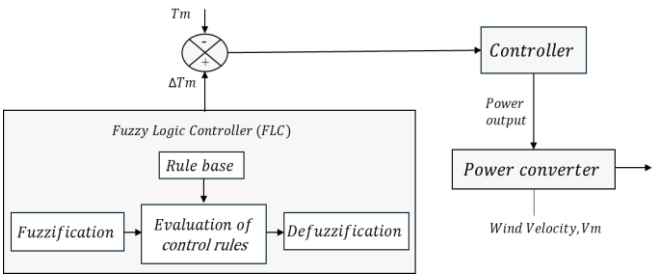

Fig 6. FLC based MPPT algorithm for WECS

D. *ANN Based MPPT Algorithm*

Maximum power point tracking (MPPT) algorithms based on artificial neural networks (ANNs) are being used widely in wind energy conversion systems (WECS) because they can adapt very quickly with the wind speed conditions[3], [8]. they consist of three main layers: an input layer, one or more hidden layers, and an output layer [24], as

shown in Fig. 7. The number of neurons in each layer depends on the complexity of the problem or the complexity of the system it is used for, and is usually defined by the user [20]. In the WECS, the variables thatusually used as inputs are: wind speed, rotor speed, output torque and terminal voltage. The function of the network is to produce a reference signal such as the optimum power or the optimal rotational speed, which will be used to drive the power converters and achieve the maximum power point (MPP) [25], [26]. Whether the network works correctly depends on the weights assigned to the connections between neurons, and the learning algorithm used to adjust these weights. The successful learning of the network reduces the response time of the systemwhichimprove the stability and the efficiency of the energy production even in the sudden and in therapid variations of wind speed. There are two main types of neural network structures used in WECS: feedforward networks and feedback loop networks. Feedforward networks are the most used, because they are the simpler type and process efficiently the real-time signals. The network is then trained using algorithms such as Levenberg-Marquardt, which allows fast convergence to an accurate result by reducing the squared error to a minimum. and using data from real wind conditions can help the ANNs to learn efficiently and to estimate the optimal parameters to extract the maximum energy. [26] In summary, MPPT algorithms based on artificial neural networks provide a very good balance between response speed and energy efficiency, therefore they are highly adapted to wind systems subject to variable wind conditions.

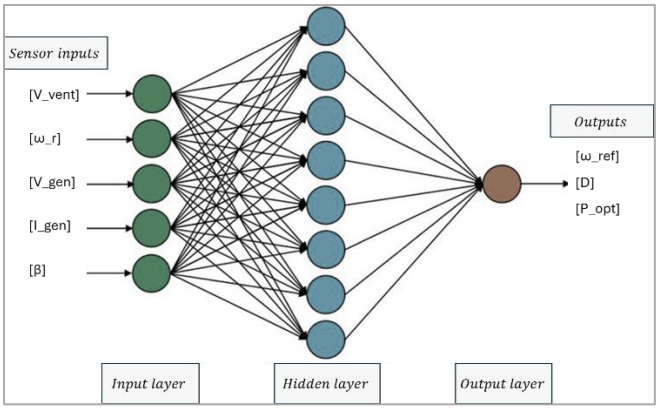

Fig 7. ANN Diagram

IV. Review results and discussion

After reviewing four Maximum Power Point Tracking (MPPT) algorithms for the extraction of maximum energy from wind energy systems (WECS), a comparative table (Table 1) is presented. This table compares the methods based on several important factors such as: efficiency, complexity, adaptability to wind changes, cost, etc.

The P&O (Perturb and Observe) algorithm is the simplest and most used algorithm. It is easy to implement and is not expensive, which makes it ideal for small systems. But it also has some significant limitations, most especially in the fast-changing wind conditions. In these cases, it can confuse small variations in power due to turbulence with a real change in the point of maximum power, which leads to oscillations and hence a significant decrease in efficiency. In addition, the choice of step size in this algorithm is a real compromise: a large step makes the system faster but less stable, and a small step makes it more accurate but slower to respond. The TSR (Tip Speed Ratio) method is more efficient than P&O when wind conditions are stable, because it adjusts the rotor speed so that it is optimized for the wind speed. On the other hand, it is very dependent on accurate wind speed measurement. This means the needs of more sensors, more complexity and then a higher cost. And if the measurements are not very accurate, performance will rapidly drop. Also, as this method relies on sensors or estimates, it becomes less accurate when the wind changes brutally. Algorithms based on fuzzy logic (FLC) are very interesting because they can control complex, non-linear and uncertain systems without the need for a very accurate mathematical model. They are also very robust against measured data noise and parameter fluctuations. This is a major advantage in unstable and unforeseeable wind conditions. However, their performance greatly depends on the quality of the rules and on membership functions, which require expert knowledge to adjust correctly. Also, their complexity increases with the number of inputs and on rules, making real-time processing harder, especially for the large systems. ANN-based algorithms offer better performance in terms of adaptability and efficiency, especially during rapid wind changes, thanks to their learning ability and generalization power.

TABLE I. Comparison of characteristics of various MPPT methods

Features of the MPPT Algorithm	**TSR**	P&O	**FLC**	**NN**
Efficiency	High efficiency	Moderate efficiency	Higher	Higher
System Complexity	Moderate	Low	Higher	Higher
Adaptability to Wind Variations	Good	Moderate	High	High
Implementation Cost	Moderate	Low	Higher	Higher
Real-Time Operation	Good	Moderate	Very Good	Very Good
Robustness to Non-Linearities	Moderate	Low	High	High
Training/Data Requirement	Low (real-time estimation)	Low (simple perturbations)	High (requires rule design and tuning)	High (requires training data for learning)
Response Time	Moderate	Fast	Fast	Very Fast

Thus training the network with various wind conditions allows it to accurately predict the optimal operating point even in complex situations. However, ANN algorithms require a lot of computation and a large amount of training data to work well. Thus their complexity and their training requirements also increase costs, and poor training can result in weak generalization wich reduce efficiency. Comparing these methods shows that P&O is attractive for its simplicity and its low cost but is not suitable for situations requiring fast

response and high consistency, and the TSR method provides a better efficiency in stable conditions but struggles with stability when accurate wind speed measurement is difficult, fo the FLC, is offers flexibility and robustness against uncertainties but requires precise tuning and involves more complexity, and ANN techniques are very effective in handling complex, changing environments and provide high efficiency and robustness, but they are also more complex, require a lot of training data, and cost more to implement. In general, the choice of the most suitable algorithm is depending on the needs of the application, such as desired efficiency, acceptable complexity, cost limitations, and the level of adaptability required to handle wind variations. Hybrid methods that combine these algorithms can provide better performance by using the strengths of each approach while reducing their weaknesses.

V. Conventional MPPT Control Methods in Offshore WECS

A. *State of the art on offshore wind*

The offshore wind energy is one of the most promising options in the overall energy transition, because of the large available offshore resources, the stability of wind conditions, and the possibility of the installation of high-power installations far from the most highly populated areas. However, this solution also presents a lot of technical, economic and environmental challenges, which require innovative and technological solutions at all the different levels of the system. The marine environment provides a very higher and more constant wind speed than that which is available on land, which translates into a very high energy density. Offshore sites are generally less exposed to turbulence and to topographical variations, which ensures more consistent and efficient production[27]. Offshore wind power can consequently provide a very significant contribution to carbon neutral objectives, provided that it is well integrated into the national and into the international energy mix [28]. Predicted annual increases in the production of global wind energy and the cumulated global capacity of wind energy show a constant progression, which is being largely supported by offshore wind energy projects (Fig. 9)

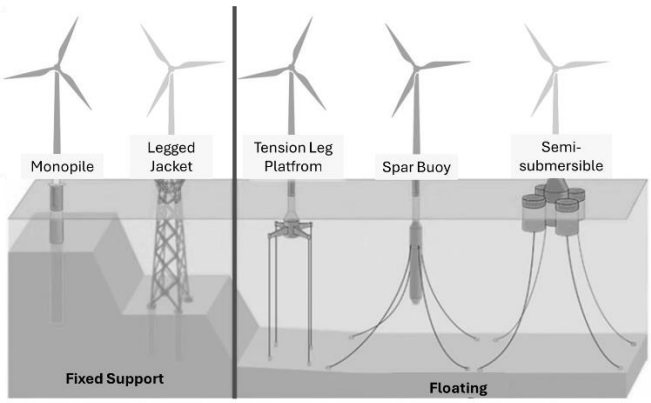

Fig 8: Structural platforms designed to sustain offshore wind turbines

B. *Offshore support structures and economic considerations*

The complexity of the marine environment has mainly resulted in the development of a many different types of structures of the support, all of which vary depending on the depth of the water and the conditions of the environmental. The main types are the fixed-foundation systems such as the monopiles and the four-legged jackets, which can be effective at depths of up to 60 m [29]. And for a more significant depths, the floating structures will become more important by including the tension leg platform (TLP), semi-submersible floats and the spar buoy designs (see Fig. 8). While these structures are more expensive to install and to maintain, they also provide a good opportunity to explore much bigger wind fields [30].

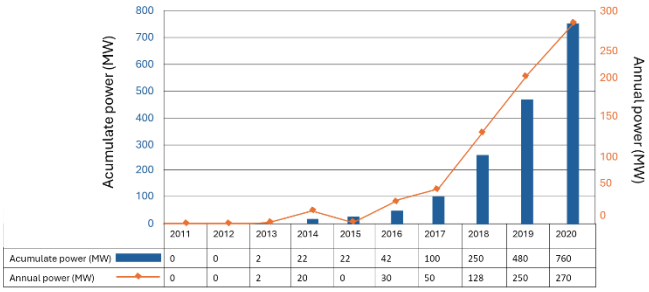

Fig 9. 2011–2020 Projections: Annual and Cumulative Wind Power Evolution

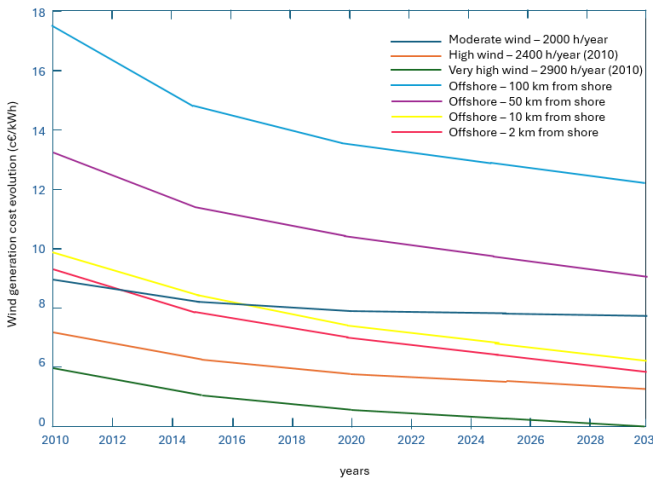

Fig 10. Projected evolution of wind generation costs: onshore (blue, orange, green) and offshore (light blue, purple, yellow, red) [27]

The developments in the hydrodynamic models and combined simulations have provided a better understanding of the dynamic performance of these systems, which are exposed to the combination of wind, waves and currents [31]. For example, the TLP platforms show a very stable response even in high waves because of their pre-tensioned mooring lines, while the semi-submersible floats compensate for the hydrodynamic forces by their geometric configuration and mass distribution [30]. These solutions, although very complex, are absolutely necessary to ensure the durability of systems in areas with very high energy potential. The development of offshore wind power has been held back for a long time by the higher production costs compared with onshore systems. However, technological strategies, the progressive industrialization of the components and the logistic sharing have resulted in a significant cost reduction since 2010 [32]. As Fig. 10 shows, the average discounted cost of electricity (LCOE) has decreased very significantly, from more than 16 c€/kWh in 2010 to less than 10 c€/kWh in 2025 for installations located at 10 km from the shore. And this reduction is also due to the optimization of the size of the

structures , the automatization of the operation and the maintenance (O&M) processes, as well as the introduction of higher-power turbines, now achieving between 12 and 15 MW [33]. In addition, the use of the digital twins and the predictive analysis provide more efficient maintenance on a conditional basis, significantly reducing both downtime and human interventions[34]. These technologies require a favorable regulatory and an economic environment, which includes a competitive invitation to submit bids and support for applied research [28].

Finally, port logistics, the management of the high-voltage submarine cables, and the integration into the terrestrial networks all remain critical issues in terms of overall cost, which require a system approach from the very earliest planning steps [35]. The current trend is for the increased collaboration between the different industrial players, the research institutions and the regulatory authorities to develop a strong, sustainable and highly cost-effective offshore industry on a global scale[36].

C. Comparative Insight and Recommendations for Offshore

The integration of the maximum power point tracking techniques in offshore wind conversion systems presents a complex and a multidimensional challenge that largely goes outside the design frameworks that have been developed for onshore environments. In contrast to ground-based systems, offshore turbines have to overcome the mechanical instabilities that are inherent in a floating or semi-submersible structure, the continuous hydrodynamic demands, the extended exposures to high salt corrosion, and the very limited access for maintenance and reconfiguration. These factors mean that the MPPT algorithms need to be much more robust, independent in their decision-making and much more adaptive in their response. The perturb and observe approach, for example, is confronted with the instability that is intrinsic to the power signal, which becomes noisy as a result of the oscillatory movements of the flagpole, the coupled action of long waves and cross winds, and the inertial effects caused by the rotating masses that are affected by the platform's parasitic acceleration and deceleration, with the complexity of the marine environment and the limitations of traditional MPPT methods at sea, it is important to compare these techniques in a structured way. Each algorithm reacts in a different way to the difficult and varying conditions offshore. To provide a better overview of their advantages and disadvantages in this context, Table II presents an overview of the main characteristics of the four MPPT techniques studied. The table gives a clearer view of the differences between the methods, in particular in terms of efficiency, adaptability, robustness, real-time operation and cost-effectiveness - all of which are crucial to ensure a sustainable and efficient power generation in the offshore environment.

The distinction between a significant energy variation due to a real change in the operating point, and a transient fluctuation related to dynamic inertia or to an incident wave then becomes confused, which compromises the direction of the perturbation to be implemented, which can result in a continuous deviation far from the optimum point or a series of oscillations without convergence. This behavior is all the more accentuated by the limits of sensor acquisition at sea, where the permanent humidity, the temperature gradients,

TABLE II. COMPARISON OF THE PERFORMANCE OF MPPT TECHNIQUES IN AN OFFSHORE ENVIRONMENT

Feature	**P&O**	**TSR**	**Fuzzy Logic (FLC)**	**ANN**
Efficiency	Reduced (unstable signal → oscillations)	Medium (depends on wind estimation accuracy)	High	Very High
System Complexity	Low	Medium	High	Very High
Adaptability to Wind Variations	Low	Medium	High (membership functions can adapt)	Very High (learning-based adaptability)
Implementation Cost	Low	Medium	High (expert design needed)	High (training data & resources required)
Real-Time Operation	Weak (perturbation misinterpretation at sea)	Sensitive to wind measurement distortion	Good (if adaptive fuzzy is used)	Very Good (if lightweight, real-time capable models used)
Robustness to Non-Linearities	Low (signal easily disrupted)	Medium	High (handles uncertainties)	Very High (robust learning behavior)
Training/Data Requirement	Low	Low	Medium	High
Response Time	Fast, but unstable	Moderate	Fast and responsive	Very Fast (with trained networks)

the condensation, and the electrostatic charges have an impact on the accuracy of the measurement, especially on sensitive quantities such as the electromagnetic torque, the terminal voltage, or the residual magnetic flux. The TSR algorithm also becomes very sensitive offshore, as it is based on a continuous estimation of the speed ratio between the rotor and the wind, which can then no longer be measured with precision due to the deformation of the ambient wind by the platform's own dynamics: the appeared wind becomes a complex combination of the real wind, the effects of the pitch and roll, and the turning movement of the turbine nacelle. Therefore, the reconstruction of the real aerodynamic profile requires predictive models which integrate the equations of

movement with their six degrees of frequency, an estimation on line of the drift of the sensors, and an inertial adjustment that makes it possible to separate the relative movement of the platform from the essential aerodynamic behavior of the blades. In this context, fuzzy logic control methods have greater potential, provided that they are redefined according to the constraints specific to the offshore domain: the membership functions can no more be fixed or consistent, they must adapt dynamically to turbulence limits, the evolution of the waves, the quality of the input data, and integrate into their rules a component for the management of structural uncertainties, or even on-line learning. A static fuzzy logic becomes totally irrelevant in a marine environment because it does not reflect the complex dynamics of the wind-wave-platform coupling. Only fuzzy adaptive or self-adjusting systems can maintain stable operation when parameters change with ageing, fouling or gradual mechanical degradation. Combining this fuzzy logic with artificial intelligence modules, in particular artificial neural networks, provides a very attractive option, but is not without its difficulties and challenges: the ANNs must be trained on databases specific to offshore environments, with extreme cases such as windstorms, slow sensor deviations, complex mechanical instability, and sudden transitions in aerodynamic patterns. In addition, the network models must be able to run on limited-capacity onboard platforms, while ensuring that the processing time is fully adapted to the real dynamics of the system. This means that network architecture has to be redesigned, using compression techniques, weight quantification, or hybrid solutions that combine a prediction part using a neural network and a decision-making part using an advanced system. The use of recurrent or long-term memory networks is also critical in order to take into account the time delay effects of the waves on the measured parameters and to integrate the dynamic signals characteristic of the platform. All these considerations require a complete transformation of the control structures: MPPT algorithms must now include multi-physical coupled effects. consider that the energy extracted depends not only on the wind speed, but also depends on the angular speed caused by the vibrations, the deformation of the blades by the asymmetric charges, or the rotating gyroscopic effect caused by the turning of the floating base.

The point of maximum power thus becomes a moving point in a multidimensional space, affected by aerodynamic, mechanical, environmental and even electromagnetic parameters. This requires a complete review not only of the control rules, but also of the data processing infrastructure itself: robust state observers, non-linear adaptive filters, integrated fault detection systems, and an intelligent control system with the ability to switch dynamically between different strategies depending on the actual conditions. The current drive is to construct collaborative control systems, where the intelligence is shared between specialized modules - wind estimation, power prediction, sensor monitoring, on-line optimization - which exchange in real time to maintain optimal operation in an environment that is highly unstable, remote, expensive to maintain and highly fluctuating. This is not just a question of controlling techniques, but of integrating them into a highly resilient, adaptive and learning architecture, able to ensure maximum energy efficiency in an offshore context that is becoming more and more strategic for the world's energy future.

VI. Conclusion

In conclusion, the analysis of the four algorithms P&O, TSR, FLC, and ANN shows that each one has its advantages and has its limitations, depending on the conditions of the application. The P&O algorithm is simple and it has a low cost, but it has some difficulties when the wind changes fast. The TSR performs well under stable wind conditions, but it depends on accurate measurements. The FLC is very efficient against uncertainty, but its design is more complicated. ANN is adaptable and highly accurate, but it requires a lot of training and computational resources. Of all the algorithms, ANN has the most efficient performance in complex and in changing environments because it can learn and it can adapt to different wind conditions. And in the offshore systems, all these challenges are even more important because of mechanical movements, the demanding marine conditions, and the difficult maintenance. This highlights the need for the MPPT techniques to be adapted to the marine environment with more intelligent and more flexible solutions that can keep up with any changes in real time and that can ensure effective, stable production even offshore.

Acknowledgment *(Heading 5)*

As part of the PASS – PhD Associate Scholarship program, this research received financial support from the National Center for Scientific and Technical Research (CNRST) in Morocco.

References

[1] M. Yessef, B. Bossoufi, M. Taoussi, A. Lagrioui, and M. El Mahfoud, “Evaluation of Adaptive Backstepping Control Applied to DFIG Wind System Used on the Real Wind Profile of the Dakhla-Morocco City,” in WITS 2020, S. Bennani, Y. Lakhrissi, G. Khaissidi, A. Mansouri, and Y. Khamlichi, Eds., Singapore: Springer Singapore, 2022, pp. 661–671.

[2] M. Yessef, B. Bossoufi, M. Taoussi, and S. Motahhir, “Improving the Maximum Power Extraction from Wind Turbines Using a Second-Generation CRONE Controller,” no. May, 2022, doi: 10.3390/en15103644.

[3] J. Pande, P. Nasikkar, K. Kotecha, and V. Varadarajan, “A review of maximum power point tracking algorithms for wind energy conversion systems,” J. Mar. Sci. Eng., vol. 9, no. 11, 2021, doi: 10.3390/jmse9111187.

[4] M. A. Abdullah, A. H. M. Yatim, C. W. Tan, and R. Saidur, “A review of maximum power point tracking algorithms for wind energy systems,” Renew. Sustain. Energy Rev., vol. 16, no. 5, pp. 3220–3227, 2012, doi: 10.1016/j.rser.2012.02.016.

[5] H. Chojaa et al., “Advanced Control Techniques for Doubly-Fed Induction Generators Based Wind Energy Conversion Systems,” IEEE Glob. Energy Conf. GEC 2022, pp. 282–287, 2022, doi: 10.1109/GEC55014.2022.9987088.

[6] S. Gousiya and C. S. V. Vyas, “Maximum Power Point Tracking Algorithms in Wind Energy System,” Int. J. Adv. Res. Innov., vol. 8, no. 4, pp. 93–99, 2020, doi: 10.51976/ijari.842015.

[7] M. A. Abdullah, A. H. M. Yatim, and C. W. Tan, “A study of maximum power point tracking algorithms for wind energy system,” 2011 IEEE 1st Conf. Clean Energy Technol. CET 2011, no. June, pp. 321–326, 2011, doi: 10.1109/CET.2011.6041484.

[8] D. Kumar and K. Chatterjee, “A review of conventional and advanced MPPT algorithms for wind energy systems,” Renew. Sustain. Energy Rev., vol. 55, pp. 957–970, 2016, doi: 10.1016/j.rser.2015.11.013.

[9] X. Zhang, J. Jia, L. Zheng, W. Yi, and Z. Zhang, “Maximum power point tracking algorithms for wind power generation system: Review, comparison and analysis,” Energy Sci. Eng., vol. 11, no. 1, pp. 430–444, 2023, doi: 10.1002/ese3.1313.

[10] B. Rached, M. Elharoussi, and E. Abdelmounim, “Design and investigations of MPPT strategies for a wind energy conversion system based on doubly fed induction generator,” Int. J. Electr. Comput. Eng., vol. 10, no. 5, pp. 4770–4781, 2020, doi: 10.11591/ijece.v10i5.pp4770-4781.

[11] M. Yessef, M. Taoussi, H. Benbouhenni, A. Lagrioui, I. Colak, and H. Ameziane, “Two different controllers-based DPC of the doubly-fed induction generator with real-time implementation on dSPACE 1104 controller board,” vol. 57, no. 8, pp. 1123–1145, 2024, doi: 10.1177/00202940241236288.

[12] E. Bekiroglu and M. D. Yazar, “MPPT Control of Grid Connected DFIG at Variable Wind Speed,” Energies, vol. 15, no. 9, 2022, doi: 10.3390/en15093146.

[13] M. Hallak, M. Hasni, and M. Menaa, “Modeling and Control of a Doubly Fed Induction Generator Base Wind Turbine System,” Proc. 2018 3rd Int. Conf. Electr. Sci. Technol. Maghreb, Cist. 2018, no. October 2015, 2018, doi: 10.1109/CISTEM.2018.8613399.

[14] A. Chahbi et al., “A Comprehensive Approach to Wind Turbine Optimization Integrating MPPT and Speed Control,” 2024 6th Int. Symp. Adv. Electr. Commun. Technol. ISAECT 2024, no. December, 2024, doi: 10.1109/ISAECT64333.2024.10799765.

[15] M. Heydari and K. Smedley, “Comparison of maximum power point tracking methods for medium to high power wind energy systems,” 20th Electr. Power Distrib. Conf. EPDC 2015, no. April, pp. 184–189, 2015, doi: 10.1109/EPDC.2015.7330493.

[16] M. Yessef, B. Bossoufi, M. Taoussi, and A. Lagrioui, “Enhancement of the direct power control by using backstepping approach for a doubly fed induction generator,” Wind Eng., vol. 46, no. 5, pp. 1511–1525, 2022, doi: 10.1177/0309524X221085670.

[17] Soedibyo, A. F. Adila, S. Anam, and M. Ashari, “A Comparative Study of Maximum Power Point Tracking Algorithms for Wind Energy Systems in Giligenting Island,” Proc. - 2019 Int. Semin. Intell. Technol. Its Appl. ISITIA 2019, pp. 114–119, 2019, doi: 10.1109/ISITIA.2019.8937136.

[18] A. E. Yaakoubi, L. Amhaimar, K. Attari, M. H. Harrak, M. E. Halaoui, and A. Asselman, “Non-linear and intelligent maximum power point tracking strategies for small size wind turbines: Performance analysis and comparison,” Energy Reports, vol. 5, pp. 545–554, 2019, doi: 10.1016/j.egyr.2019.03.001.

[19] A. A. Salem, N. A. N. Aldin, A. M. Azmy, and W. S. E. Abdellatif, “Implementation and Validation of an Adaptive Fuzzy Logic Controller for MPPT of PMSG-Based Wind Turbines,” IEEE Access, vol. 9, pp. 165690–165707, 2021, doi: 10.1109/ACCESS.2021.3134947.

[20] R. Aruna and D. S. Balaraman, “Fuzzy Logic Control Based Maximum Power Point Tracking for Wind Energy Conversion System,” Int. J. Adv. Res. Sci. Commun. Technol., vol. 6, no. 2, pp. 760–767, 2021, doi: 10.48175/ijarsct-1475.

[21] A. Lafi, “DFIG control: A fuzzy approach,” Int. J. Adv. Appl. Sci., vol. 6, no. 9, pp. 107–116, 2019, doi: 10.21833/ijaas.2019.09.015.

[22] M. Yessef, B. Bossoufi, M. Taoussi, H. Benbouhenni, A. Lagrioui, and H. Chojaa, “Intelligent Direct Power Control Based on the Neural Super-Twisting Sliding Mode Controller of a DFIG,” in Digital Technologies and Applications, S. Motahhir and B. Bossoufi, Eds., Cham: Springer Nature Switzerland, 2023, pp. 726–735.

[23] A. Dida and D. Benattous, “A complete modeling and simulation of DFIG based wind turbine system using fuzzy logic control,” Front. Energy, vol. 10, no. 2, pp. 143–154, 2016, doi: 10.1007/s11708-016-0402-1.

[24] M. Yessef et al., “Real-Time Validation of Intelligent Super-Twisting Sliding Mode Control for Variable-Speed DFIG Using dSPACE 1104 Board,” IEEE Access, vol. 12, no. January, pp. 31892–31915, 2024, doi: 10.1109/ACCESS.2024.3367828.

[25] R. Tiwari, K. Kumar, R. B. Neelakandan, S. Padmanaban, and P. W. Wheeler, “Neural network based maximum power point tracking control with quadratic boost converter for PMSG—wind energy conversion system,” Electron., vol. 7, no. 2, 2018, doi: 10.3390/electronics7020020.

[26] K. Dahmane et al., “Hybrid MPPT Control: P&O and Neural Network for Wind Energy Conversion System,” J. Robot. Control, vol. 4, no. 1, pp. 1–11, 2023, doi: 10.18196/jrc.v4i1.16770.

[27] A. Colmenar-Santos, J. Perera-Perez, D. Borge-Diez, and C. Depalacio-Rodríguez, “Offshore wind energy: A review of the current status, challenges and future development in Spain,” Renew. Sustain. Energy Rev., vol. 64, pp. 1–18, 2016, doi: 10.1016/j.rser.2016.05.087.

[28] M. Arshad and B. C. O’kelly, “Offshore wind-turbine structures: A review,” Proc. Inst. Civ. Eng. Energy, vol. 166, no. 4, pp. 139–152, 2013, doi: 10.1680/ener.12.00019.

[29] I. Galparsoro et al., “Reviewing the ecological impacts of offshore wind farms,” npj Ocean Sustain., vol. 1, no. 1, pp. 1–8, 2022, doi: 10.1038/s44183-022-00003-5.

[30] T. Asim, S. Z. Islam, A. Hemmati, and M. S. U. Khalid, “A Review of Recent Advancements in Offshore Wind Turbine Technology,” Energies, vol. 15, no. 2, 2022, doi: 10.3390/en15020579.

[31] H. Díaz and C. Guedes Soares, “Review of the current status, technology and future trends of offshore wind farms,” Ocean Eng., vol. 209, no. April, p. 107381, 2020, doi: 10.1016/j.oceaneng.2020.107381.

[32] X. Ma, M. Li, W. Li, and Y. Liu, “Overview of Offshore Wind Power Technologies,” Sustain., vol. 17, no. 2, pp. 1–16, 2025, doi: 10.3390/su17020596.

[33] D. Song et al., “Review on the Application of Artificial Intelligence Methods in the Control and Design of Offshore Wind Power Systems,” J. Mar. Sci. Eng., vol. 12, no. 3, 2024, doi: 10.3390/jmse12030424.

[34] B. Benyachou, B. Bahrar, A. Moufakkir, K. Gueraoui, and M. Saidi Hassani Alaoui, “Optimization & control strategy for offshore wind turbine based on a dual fed induction generator,” Mater. Today Proc., vol. 58, pp. 1470–1475, 2022, doi: 10.1016/j.matpr.2022.02.546.

[35] M. Masoumi, “Machine Learning Solutions for Offshore Wind Farms: A Review of Applications and Impacts,” J. Mar. Sci. Eng., vol. 11, no. 10, 2023, doi: 10.3390/jmse11101855.

[36] J. Li and G. Hou, “Data-driven modeling and MPPT control of offshore wind turbines based on machine learning approach,” Ocean Eng., vol. 329, no. December 2024, p. 121121, 2025, doi: 10.1016/j.oceaneng.2025.121121.